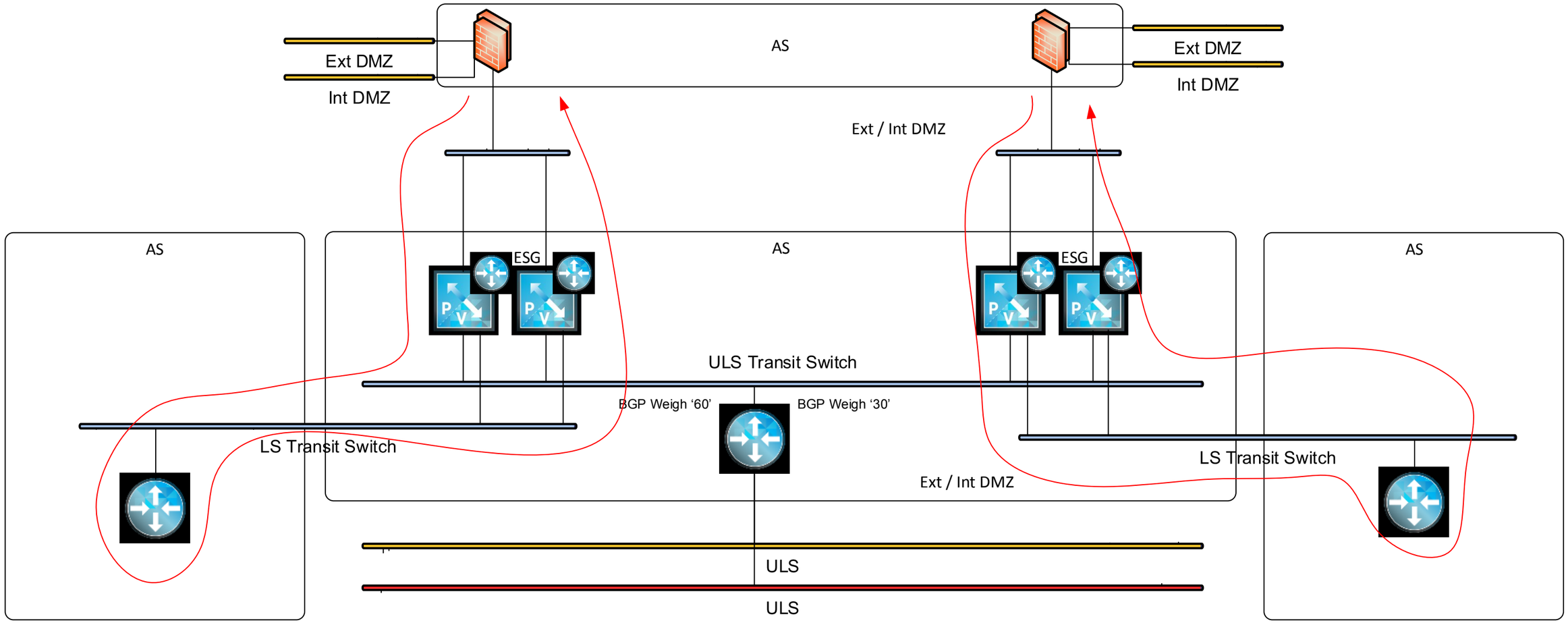
AS
Ext DMZ
Int DMZ
AS
Ext DMZ
Int DMZ
Ext / Int DMZ
AS
AS
AS
ESG
ESG
ULS Transit Switch
BGP Weigh '60'
BGP Weigh '30'
LS Transit Switch
LS Transit Switch
Ext / Int DMZ
ULS
ULS